Technical Data Sheet

Alpha 45

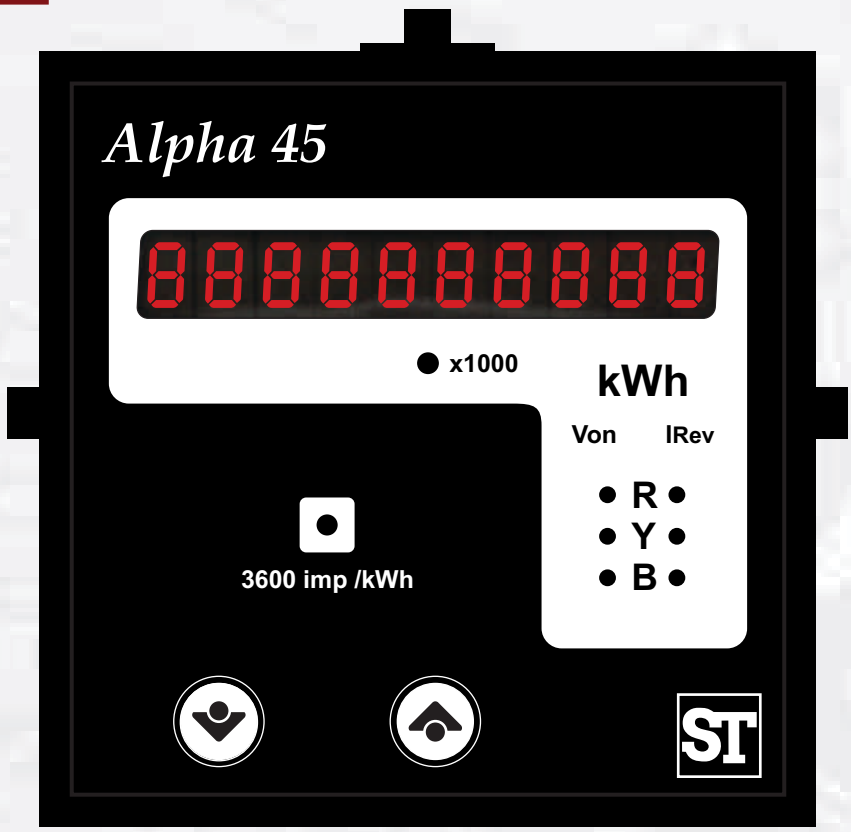

Alpha 45 is a compact multifunction instrument which is a 96mm x 96mm panel mounted kilowatt hour meter it measures active energy with class 1.0 accuracy having auto-resetting 8 digit seven segment LED counter.

Special Features

- Available in 3 phase 4 wire , 3 phase 3 wire and single phase version
- Indication: Healthy phase, Reverse Current
- Applicable to Standards IEC 62053-21
- 8 Digit auto-ranging auto-resettable seven segment LED display counter
- Fully programmable CT ratios
- Fully programmable PT ratios
- Built in transient protection
- Remote data reading through MODBUS (RS-485)

Application

Alpha 45 is a 96mm x 96mm panel mounted kilowatt hour meter it measures active energy with class 1.0 accuracy having auto-resetting 8 digit seven segment LED counter. The unit provides LED indication for healthy phase, load reverse current. The Alpha 45 is available in two version 3phase 4 wire / 3 wire unbalanced load and single phase and is ideal for secondary metering in industrial applications.

Product Features

3 phase voltage status	Three indications are provided, one for each voltage phase. Three illuminated indication indicate active monitoring of each of the three phases. In case if any one phase voltage is missing the appropriate indication will switch 'OFF' .However the meter will continue to accurately measure energy for the available voltage phases. In case of phase sequence error all three indication will start blinking.
Reverse connected current transformer	Three indications are provided for each of three phases. Illumination of the indication indicates a reverse connected CT. The meter will continue to register the energy consumption even if the CT's are reverse connected.
Pulse Indication	The unit features a red LED pulse indicator which flashes at rate proportional to measured power (3600 impulses / kWh). This is used for verifying calibration of the meter on site.
Energy Count storage	In case of power failure, the instrument memorizes the last energy count. Every 40 sec, the instrument updates the energy counter in the non-volatile memory.
Compliance to International Safety standards	Compliance to International Safety standard IEC 61010-1- 2001

Programmable Energy format & Energy rollover count	Customer can assign the format for energy display on MODBUS (RS-485) in terms of W, kW or MW. Additional to this, customer can also set a rollover count from 7 to 14 digits (for W), 7 to 12 digits (for kW) & 7 to 9 digits (for MW), after which the energy will roll back to zero. The above settings are applicable for all types of energy.
Parameter Screen recall	In case of power failure, the instrument memorizes the last displayed screen. The displayed screen will get memorized only if user keeps this screen for minimum 40 sec duration before power failure for fixed screen mode.
Configuration of the Instrument via MODBUS	The instrument settings can be configured locally via front panel keys by entering into Programming mode or remotely via MODBUS (RS485). Note: The MODBUS communication parameters can only be set locally via front panel keys in the Programming mode.
User Assignable Registers for MODBUS	Customer can assign MODBUS register address as per his need for faster response time.
Low back depth	The instrument has very low back depth (behind the panel) of less than 80 mm in spite of optional features like pulse output
Enclosure Protection for dust and water	confirms to IP 54 (front face)

Technical Specifications

Reference conditions for Accuracy	
Reference temperature	23°C +/- 2°C
Input waveform	Sinusoidal (distortion factor 0.005)
Input frequency	50 or 60 Hz ±2%
Auxiliary supply voltage	Rated Value ±1%
Auxiliary supply frequency	Rated Value ±1%
Voltage Range	50... 100% of Nominal Value.
Current Range	10... 100% of Nominal Value.
Power Factor	0.5 lag….1….0.8 lead
Power	10... 100% of Nominal Current & 50... 100% of Nominal Voltage.

Accuracy	
Active energy (kWh)	1 % (IEC 62053-21)
Voltage	±0.5% of Nominal value
Current	±0.5% of Nominal value
Frequency	0.15% of mid frequency
Active Power	±0.5% of Nominal value
Reactive Power	±0.5% of Nominal value
Apparent Power	±0.5% of Nominal value
Power Factor	1 % of Unity
Phase angle	1 % of range
Measurement error is normally much less than the error specified above. Variation due to influence quantity is less than twice the error allowed for reference condition	

Input Voltage	
Input Voltage	**PT Secondary Settable Range**
110V L-L (63.5V L-N)	100V – 120V L-L (57V – 69V L-N)
230V L-L (133V L-N)	121V – 239V L-L (70V – 139V L-N)
415V L-L (239.6V L-N)	240V – 480V L-L (140V – 277V L-N)

Input Current	
Nominal input current	1 or 5A AC RMS (To be specified while ordering)
System CT primary values	Std. values up to 4kA (1 or 5 Amp)
Starting Current	0.4% of nominal

Auxiliary Supply	
AC Auxiliary Supply	110 V AC -15% / +20% 230 V AC -15% / +20% 380 VAC-15% / +20
ACDC Auxiliary Supply	100V… 250 VAC DC
DC Auxiliary Supply	12…..48 VDC
AC Auxiliary supply frequency range	45 to 66 Hz

Dimension Details

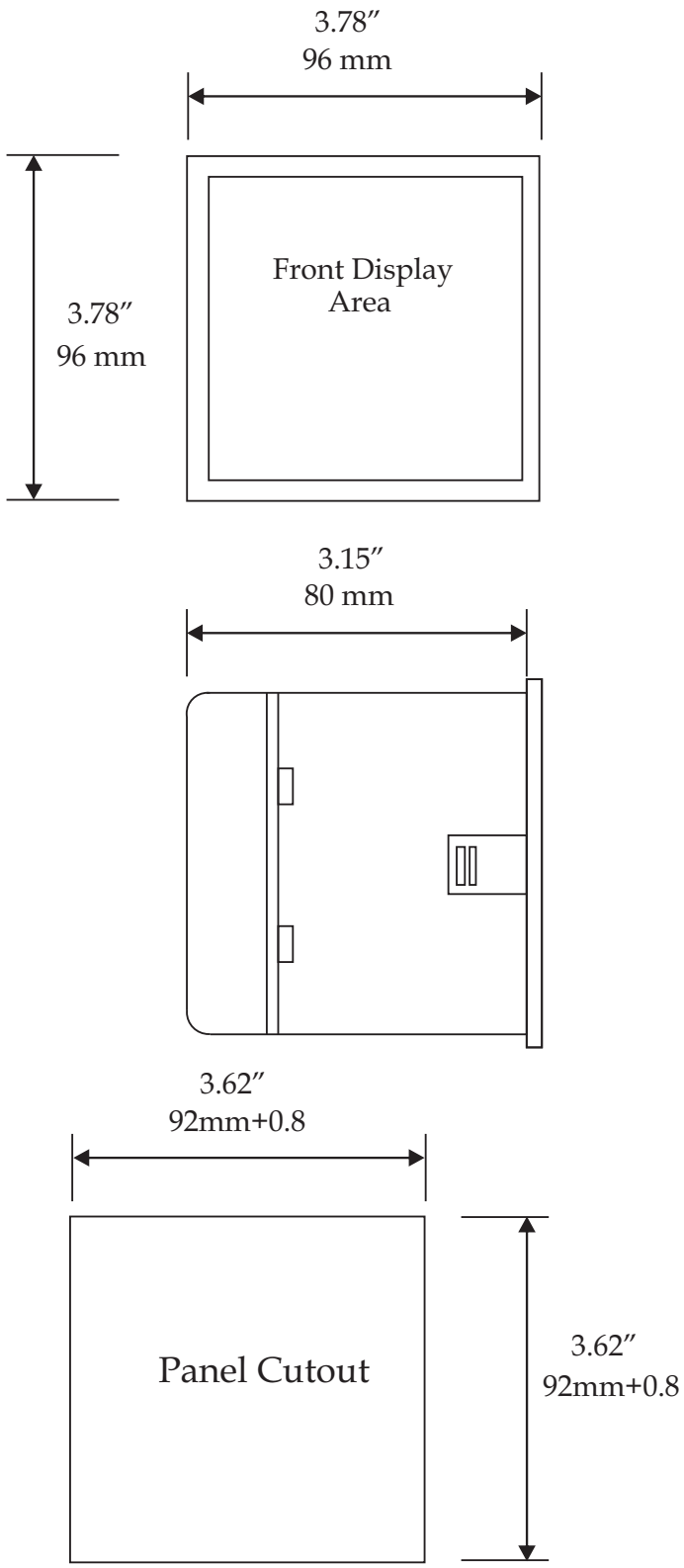

Max Panel Thickness 0.19″, 5mm

Technical Specifications

Overload Withstand	
Voltage	2 x rated value for 1 second, repeated 10 times at 10 second intervals
Current	20x for 1 second, repeated 5 times at 5 min

Operating Measuring Ranges	
Voltage	5… 120% of rated value
Current	5 … 120% of rated value
Frequency	40…70 Hz
Power Factor	0.5 Lag ... 1... 0.8 Lead

Enclosure style	
Enclosure style	96 X 96 DIN Quadratic
Enclosure material	Polycarbonate (Self extinguishing & non dripping as per UL 94 V-0)
Terminals	M4 Screw Type
Fixing	4 side clamps

VA Burden	
Nominal input voltage burden	< 0.2 VA approx. per phase
Nominal input current burden	< 0.6 VA approx. per phase
AC Supply burden	4 VA

Counter	
Counter	8 digit seven segment LED display
Reading resolution	Auto ranging

Indication	
Indicator display	3 : Voltage phase monitoring 3 : Reverse connected CT warning.
Pulse indicator	Red LED flashing at a rate proportional to measured power.

Dimension	
Dimension	96mm high x 96mm wide x 80mm deep
Panel cutout	92mm x 92mm
Weight	320-400 gm

Environmental	
Operating temperature	-20 to +70°C
Storage temperature	-30 to +80°C
Relative humidity	0... 95% non condensing
Warm up time	Minimum 3 minute
Shock	15g in 3 planes
Vibration	10... 55 Hz, 0.15mm amplitude
Enclosure	IP54 (front face only)

Electrical Connection

For 3 Phase 4 Wire Unbalanced Load

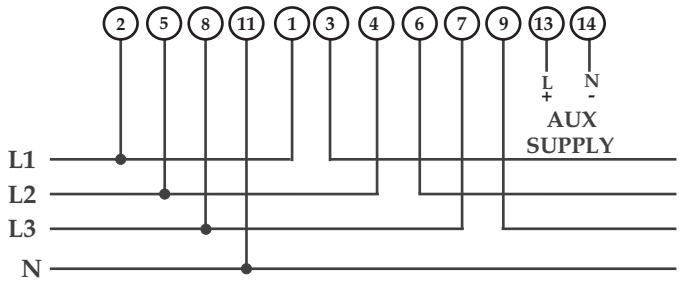

For 3 Phase 3 Wire Unbalanced Load

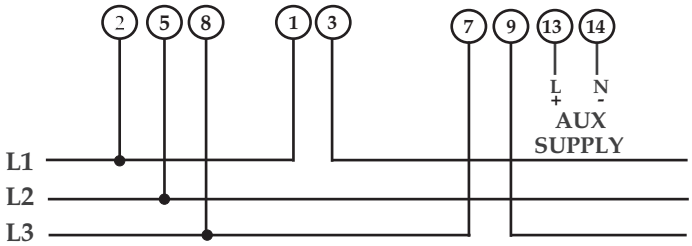

For Single Phase

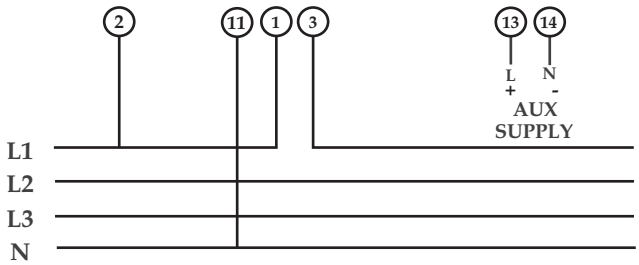

It is recommended that the wires used for connections to the instrument should have lugs soldered at the end. That is, the connections should be made with Lugged wires for secure connections. The Maximum diameter of the lug should be 7.0 mm and maximum thickness 3.5 mm.

Permissible cross section of the connection wires:

<= 4.0 mm^2 single wire or 2 × 2.5 mm^2 fine wire.

Technical Specifications

Applicable Standards

EMC	IEC 61326
Immunity	IEC 61000-4-3. 10V/m min – Level 3 industrial low level
Safety	IEC 61010-1-2001 , Permanently connected use
IP for water & dust	IEC60529
Pollution degree	2
Installation category	CAT III 300V ac rms
High Voltage Test	2.2 kV AC, 50Hz for 1 minute between all electrical circuits

Pulse output

Relay contact	1 NO
Switching Voltage & current for Relay	240 VDC ,5 A

Default pulse rate divisor

1 per Wh (up to 3600W)	1 per kWh (up to 3600kWh)	1 per MWh (above 3600kW)

Other Pulse rate divisors (applicable only when Energy on RS485 is in W)

10	1 per 10 Wh (up to 3600W)	1 per 10 kWh (up to 3600kWh)	1 per 10 MWh (above 3600kW)
100	1 per 100 Wh (up to 3600W)	1 per 100 kWh (up to 3600kWh)	1 per 100 MWh (above 3600kW)
1000	1 per 1000 Wh (up to 3600W)	1 per 1000 kWh (up to 3600kWh)	1 per 1000 MWh (above 3600kW)

Pulse Duration 60 ms, 100 ms, 200 ms

Displayed Parameters

Sr No	Parameters	3 Phase 4 Wire	3 Phase 3 Wire	1 Phase 2 Wire
1.	Active Energy (kWh) (8 digit resolution)	✓	✓	✓

Parameters Through MODBUS (Optional)

Sr No	Parameters	3 Phase 4 Wire	3 Phase 3 Wire	1 Phase 2 Wire
1.	Active Energy (Wh)	✓	✓	✓
2.	System Volts	✓	✓	✓
3.	System Current	✓	✓	✓
4.	Volts L1 – N	✓	×	×
5.	Volts L2 – N	✓	×	×
6.	Volts L3 – N	✓	×	×
7.	Volts L1 – L2	✓	✓	×
8.	Volts L2 – L3	✓	✓	×
9.	Volts L3 – L1	✓	✓	×
10.	Current L1	✓	✓	×
11.	Current L2	✓	✓	×
12.	Current L3	✓	✓	×
13.	Frequency	✓	✓	✓
14.	System Active Power (kW)	✓	✓	✓
15.	Active Power L1 (kW)	✓	×	×
16.	Active Power L2 (kW)	✓	×	×
17.	Active Power L3 (kW)	✓	×	×
18.	System Re-active Power (kVAr)	✓	✓	✓
19.	Re-active Power L1 (kVAr)	✓	×	×

✓- Available × - Not available

Parameters Through MODBUS (Optional)

Sr No	Parameters	3 Phase 4 Wire	3 Phase 3 Wire	1 Phase 2 Wire
20.	Re-active Power L2 (kVAr)	✓	×	×
21.	Re-active Power L3 (kVAr)	✓	×	×
22.	System Apparent Power (kVA)	✓	✓	✓
23.	Apparent Power L1 (kVA)	✓	×	×
24.	Apparent Power L2 (kVA)	✓	×	×
25.	Apparent Power L3 (kVA)	✓	×	×
26.	System Power Factor	✓	✓	✓
27.	Power Factor L1	✓	×	×
28.	Power Factor L2	✓	×	×
29.	Power Factor L3	✓	×	×
30.	System Phase Angle	✓	✓	✓
31.	Phase Angle L1	✓	×	✓
32.	Phase Angle L2	✓	×	×
33.	Phase Angle L3	✓	×	×
34.	Apparent Energy (VAh)	✓	✓	✓

✓- Available × - Not available

Ordering Information

Product Code	AP45-	X	X	X	X	X	X	X	X	00000
System Type	3Ph. (PR. 3W or 4W)	3								
	1Ph.	1								
Input Voltage	220V L-N		1							
	230V L-N		2							
	240V L-N		3							
	300VL-N		4							
	100VL-L		5							
	110V L-L		6							
	220V L-L		7							
	230V L-L		8							
	240V L-L		9							
	380V L-L		A							
	400V L-L		B							
	415V L-L		C							
	440V L-L		D							
	480V L-L		E							
Input Current	5A			5						
	1A			1						
Power Supply	110V AC -15% / +20%				L					
	230V AC -15% / +20%				M					
	380VAC -15% / +20%				H					
	100 - 250V AC/DC +/- 10%				U					
	45 - 450V AC/DC +/- 10%				W					
	12V - 48V DC +/- 10%				D					
	Self Powered				S					
Pulse Output	1 Pulse output					S				
	Pulse O/P not used					Z				
RS-485 MODBUS	With RS-485						R			
	Without RS-485						Z			
Terminal Sealing	With Terminal Sealing							1		
	Without Terminal Sealing							Z		
Accuracy	Class 1								1	
	Class 0.5								5	

Sifam Tinsley Instrumentation Ltd
1 Warner Drive, Springwood Industrial Estate,
Braintree, Essex CM7 2YW
Contact No. : +44 (0) 1376 335271
Email: sales@sifamtinsley.com
www.sifamtinsley.co.uk